KURT HYDRAULICS

Revised 11/16/2026

Kurt Hydraulics Crimp Diameter Specifications: Approximate Gauge Settings — Using the KH16 Crimper

The tables below are the recommended crimp diameters and settings for designated fittings to hose combinations using Kurt Hydraulics KH16 crimper. The settings are for reference only. Verify the crimp diameter by measuring the middle of the crimp at half the height of the die fingers using calipers. All units of measure are in inches. All crimp diameters are nominal and carry a tolerance of ±0.005 inches.

The tables below refer to fittings and hose distributed by Kurt Hydraulics. Kurt Hydraulics is always striving to optimize the performance of the products offered to customers please check periodically for changes to technical data.

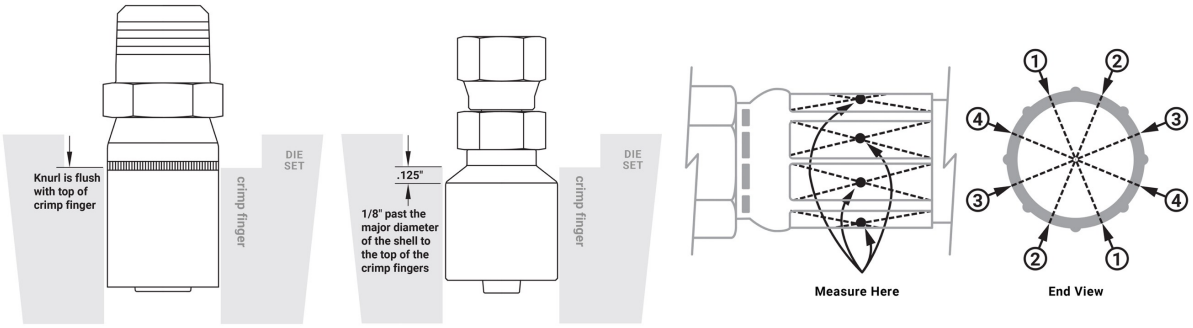

How to dial in a crimp setting with the KH16P Portable Crimper

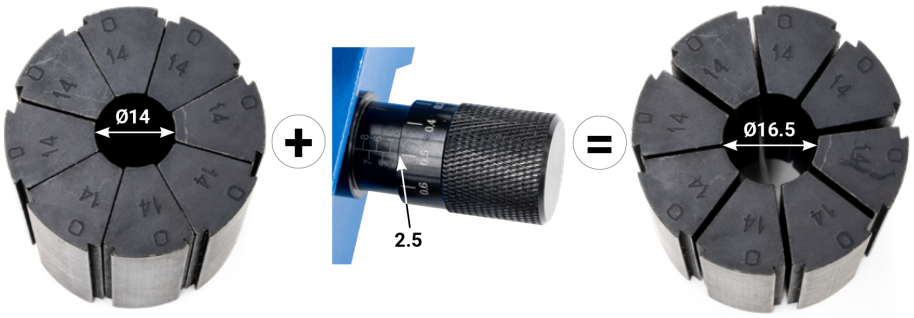

DIE DIAMETER + CRIMPER DIAL SETTING = FINAL CRIMPED SIZE

(EXAMPLE: Ø14 + 2.5 = Ø16.5 mm)

KH16P Crimper Settings

If using the Kurt KH16P Portable Crimper, the included die set is numbered on the top.

Find the correct die set, dial in the crimp setting on the dial and follow operational instructions included in the manual.

Hose	Fitting series	Die	Inch final crimp diameter ± 0.005"	Die position	Appproximate Gauge Setting
R1S-04	K2	14	0.645	FULL	2.38
R1S-04	STD	14	0.595	TO KNURL	1.11
R1S-06	K2	18	0.740	FULL	0.80
R1S-06	STD	18	0.725	TO KNURL	0.41
R1S-06	W	18	0.790	FULL	2.07
R1S-08	K2	21	0.905	FULL	1.99

Hose	Fitting series	Die	Inch final crimp diameter ± 0.005"	Die position	Appproximate Gauge Setting
R1S-08	STD	21	0.845	TO KNURL	0.46
R1S-08	W	21	0.920	FULL	2.37
R1S-10	STD	21	0.995	TO KNURL	4.27
R1S-10	W	28	1.150	FULL	1.21
R1S-12	STD	28	1.115	TO KNURL	0.32
R1S-12	W	28	1.215	FULL	2.86
R1S-16	STD	35	1.430	TO KNURL	1.32
R1S-16	W	35	1.625	FULL	6.28
R2S-04	K2	14	0.695	FULL	3.65
R2S-04	STD	14	0.645	TO KNURL	2.38
R2S-06	K2	18	0.815	FULL	2.70
R2S-06	STD	18	0.800	TO KNURL	2.32
R2S-06	W	21	0.845	FULL	0.46
R2S-08	K2	21	0.955	FULL	3.26
R2S-08	STD	21	0.910	TO KNURL	2.11
R2S-08	W	21	0.970	FULL	3.64
R2S-10	STD	21	1.030	TO KNURL	5.16
R2S-10	W	28	1.200	FULL	2.48
R2S-12	STD	28	1.190	TO KNURL	2.23
R2S-12	W	28	1.285	FULL	4.64
R2S-16	STD	35	1.507	TO KNURL	3.28
R2S-16	W	35	1.665	FULL	7.29
R16S-04	K2	14	0.670	FULL	3.02
R16S-04	STD	14	0.615	TO KNURL	1.62
R16S-06	K2	18	0.750	FULL	1.05
R16S-06	STD	18	0.740	TO KNURL	0.80
R16S-06	W	18	0.815	FULL	2.70
R16S-08	K2	21	0.915	FULL	2.24
R16S-08	STD	21	0.860	TO KNURL	0.84
R16S-08	W	21	0.945	FULL	3.00
R16S-10	STD	21	1.000	TO KNURL	4.40
R16S-10	W	28	1.178	FULL	1.92
R16S-12	STD	28	1.130	TO KNURL	0.70
R16S-12	W	28	1.230	FULL	3.24
R16S-16	STD	35	1.425	TO KNURL	1.20
R16S-16	W	35	1.555	FULL	4.50
R17-04	K2	14	0.630	FULL	2.00
R17-04	STD	14	0.565	TO KNURL	0.35
R17-06	K2	18	0.725	FULL	0.41
R17-06	STD	14	0.705	TO KNURL	3.91
R17-06	W	18	0.775	FULL	1.69
R17-08	K2	21	0.895	FULL	1.73
R17-08	STD	21	0.840	TO KNURL	0.34
R17-10	STD	21	0.995	TO KNURL	4.27
R17-10	W	28	1.170	FULL	1.72
R17-12	STD	28	1.140	TO KNURL	0.96

Hose	Fitting series	Die	Inch final crimp diameter ± 0.005"	Die position	Appproximate Gauge Setting
R17-12	W	28	1.275	FULL	4.39
R17-16	W	35	1.640	FULL	6.66
KT-04	K2	14	0.660	FULL	2.76
KT-04	STD	14	0.600	TO KNURL	1.24
KT-06	K2	18	0.760	FULL	1.30
KT-06	STD	18	0.750	TO KNURL	1.05
KT-06	W	18	0.800	FULL	2.32
KT-08	K2	21	0.925	FULL	2.50
KT-08	STD	21	0.860	TO KNURL	0.84
KT-08	W	21	0.950	FULL	3.13
KT-10	STD	21	0.985	TO KNURL	4.02
KT-10	W	28	1.170	FULL	1.72
KT-12	STD	28	1.150	TO KNURL	1.21
KT-12	W	28	1.240	FULL	3.50
KT-16	STD	35	1.455	TO KNURL	1.96
KT-16	W	35	1.545	FULL	4.24
R12-06	W	21	0.870	FULL	1.10
R12-08	W	21	1.010	FULL	4.65
R12-12	W	28	1.320	FULL	5.53
R12-12	WHP	35	1.430	FULL	1.32
R12-16	W	35	1.630	FULL	6.40
R12-16	WHP	35	1.710	FULL	8.43
4SK-10	W	28	1.290	FULL	4.77
4SK-12	W	28	1.330	FULL	5.78
4SK-12	WHP	35	1.440	FULL	1.58
4SK-16	W	35	1.670	FULL	7.42
4SK-16	WHP	35	1.720	FULL	8.69
R13-12	W	28	1.335	FULL	5.91
R13-12	WHP	35	1.490	FULL	2.85
R13-16	W	35	1.645	FULL	6.78
R13-16	WHP	35	1.740	FULL	9.20
R15-12	WHP	35	1.432	FULL	1.37
R15-16	WHP	35	1.740	FULL	9.20
R7-02	R7	8	0.355	TO KNURL	1.02
R7-03	R7	12	0.495	TO KNURL	0.57
R7-04	R7	14	0.580	TO KNURL	0.73
R7-04	STD	14	0.580	TO KNURL	0.73
R7-05	R7	14	0.630	TO KNURL	2.00
R7-06	R7	18	0.720	TO KNURL	0.29
R7-06	STD	18	0.720	TO KNURL	0.29
R7-08	R7	21	0.850	TO KNURL	0.59
R7-08	STD	21	0.850	TO KNURL	0.59
R7-12	R7	28	1.120	TO KNURL	0.45
R7-12	STD	28	1.120	TO KNURL	0.45
R7-16	R7	35	1.400	TO KNURL	0.56
R7-16	STD	35	1.400	TO KNURL	0.56

Hose	Fitting series	Die	Inch final crimp diameter ± 0.005"	Die position	Appproximate Gauge Setting
R8-03	STD	12	0.485	TO KNURL	0.32
R8-04	STD	14	0.580	TO KNURL	0.73
R8-06	STD	18	0.725	TO KNURL	0.41
R8-08	STD	21	0.830	TO KNURL	0.08
R18-04	STD	14	0.560	TO KNURL	0.22
R18-06	STD	18	0.740	TO KNURL	0.80
R18-08	STD	21	0.905	TO KNURL	1.99
R115-04	SST	8	0.355	TO KNURL	1.02
R115-05	SST	8	0.470	TO KNURL	3.94
R115-06	SST	12	0.546	TO KNURL	1.87
R115-06T	SST	14	0.580	TO KNURL	0.73
R115-08	SST	14	0.650	TO KNURL	2.51
R115-10	SST	18	0.715	TO KNURL	0.16
R115-12	SST	21	0.865	TO KNURL	0.97
R115-12T	SST	21	1.015	TO KNURL	4.78
R115-16T	SST	28	1.240	TO KNURL	3.50
R5-04	R5	12	0.535	TO KNURL	1.59
R5-05	STD	14	0.625	TO KNURL	1.88
R5-06	R5	14	0.705	TO KNURL	3.91
R5-08	R5	18	0.805	TO KNURL	2.45
R5-10	STD	21	0.915	TO KNURL	2.24
R5-12	R5	21	1.085	TO KNURL	6.56
R5-16	R5	28	1.240	TO KNURL	3.50
R5-20	R5	35	1.533	TO KNURL	3.94
HJK-04	K2	14	0.670	FULL	3.02
HJK-04	STD	14	0.634	TO KNURL	2.10
HJK-06	K2	18	0.785	FULL	1.94
HJK-06	STD	18	0.760	TO KNURL	1.30
R4-12	STD	28	1.235	TO KNURL	3.37
R4-12	W	28	1.330	FULL	5.78
R4-16	STD	35	1.465	TO KNURL	2.21
R4-16	W	35	1.650	FULL	6.91
KEH-04	K2	14	0.620	FULL	1.75
KEH-06	K2	18	0.725	FULL	0.41
KEH-08	K2	21	0.905	FULL	1.99
KEH-10	W	28	1.150	FULL	1.21
KEH-12	W	28	1.250	FULL	3.75
KEH-16	W	35	1.625	FULL	6.28
KHTR16S-04	K2	14	0.620	FULL	1.75
KHTR16S-06	K2	18	0.725	FULL	0.41
KHTR16S-08	K2	21	0.905	FULL	1.99
KHTR16S-10	W	28	1.150	FULL	1.21
KHTR16S-12	W	28	1.250	FULL	3.75
KHTR16S-16	W	35	1.625	FULL	6.28
KJW-04	K2	14	0.630	FULL	2.00
KJW-04	STD	14	0.560	TO KNURL	0.22

Hose	Fitting series	Die	Inch final crimp diameter ± 0.005"	Die position	Appproximate Gauge Setting
KJW-06	K2	14	0.700	FULL	3.78
KJW-06	STD	14	0.675	TO KNURL	3.15
KJW2-06	K2	18	0.735	FULL	0.67
KJW2-06	STD	18	0.715	TO KNURL	0.16
KJW2-08	K2	21	0.950	FULL	3.13
KJW2-08	STD	21	0.885	TO KNURL	1.48
KPL-04	STD	14	0.585	TO KNURL	0.86
KPL-06	STD	18	0.715	TO KNURL	0.16
KPL-08	STD	21	0.840	TO KNURL	0.34
KPL-10	STD	21	1.000	TO KNURL	4.40
KPL-12	STD	21	1.100	TO KNURL	6.94
BH-06	BL-SERIES-5/16	18	0.765	FULL	1.5
BH-08	BL-SERIES-13/32	21	0.875	FULL	1
BH-10	BL-SERIES-1/2	21	1.005	FULL	5
BH-12	BL SERIES-5/8	21	1.085	FULL	7
RBH-06	BLR-SERIES-5/16	14	0.595	FULL	1.5
RBH-08	BLR-SERIES-13/32	18	0.695	FULL	4.5
RBH-10	BLR-SERIES-1/2	18	0.775	FULL	2
RBH-12	BLR-SERIES-5/8	21	0.925	FULL	3.1